Western Products, PO Box 245038, Milwaukee, WI 53224-9538 • www.westernplows.com

December 15, 2016
Lit. No. 94110, Rev. 00

WIDE-OUT™ Snowplow

Blade Assembly 52810
H,A,Q&L Center Assembly 52300-1
H,A,Q&L Center Assembly, Central Hydraulics 52310-1

Parts List

A DIVISION OF DOUGLAS DYNAMICS, LLC

TABLE OF CONTENTS

WIDE-OUT™ BLADE 4
WIDE-OUT HYDRAULIC, A-FRAME, QUADRANT & LIFT FRAME (H,A,Q&L) CENTER ASSEMBLY 6
Lift Frame and A-Frame Components 6
Hydraulic Unit Components 8
Hydraulic Unit Cover Assembly 10
Lift and Angle Ram Components 11
Hoses and Fittings 11
Electrical Components 12
Vehicle-Side Harness Diagram – 3-Port, 2-Plug System 13
Vehicle-Side Harness Diagram – Central Hydraulics 14
Headlamp Kit 15

Blade Components

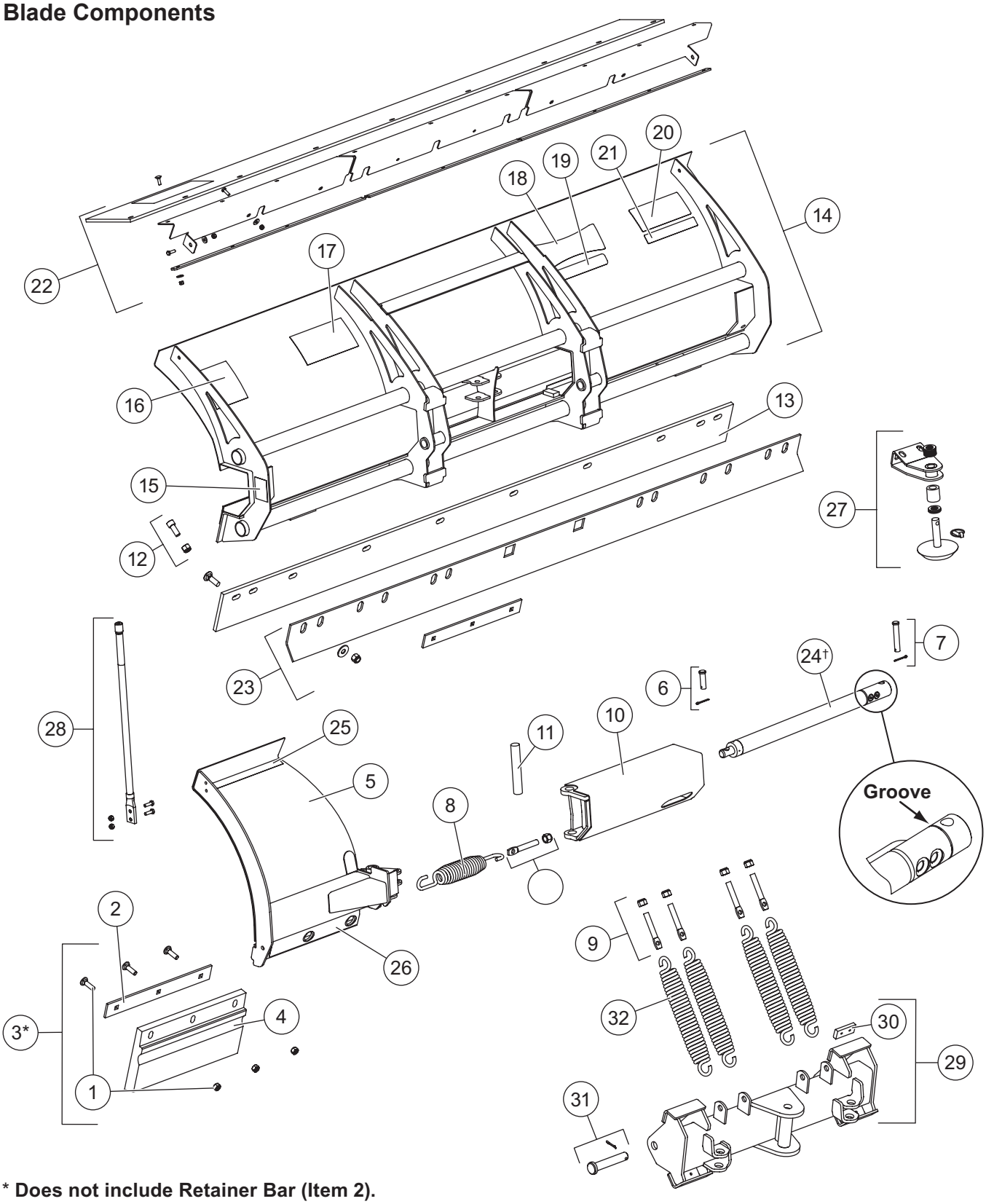

*** Does not include Retainer Bar (Item 2).**

† Current ram has a groove around the base near the pin hole. Early ram does not have a groove.

WIDE-OUT Blade Components					
Item	**Part**	**Description**	**Item**	**Part**	**Description**
1	50642	Bolt Kit, Urethane Edge	19	28404	Label – Identity, ULTRAFINISH™
2	50644	Retainer Bar	20	44451	Label – Identity, WESTERN® 8.31
3	50626	Kit, Urethane Edge Assembly (Does not include Retainer Bar.)	21	50603	Label – WIDE-OUT 8'–10'
			22	52280	Deflector Kit, WIDE-OUT (accessory only)
4	50645	Urethane Edge	23	52278	Back Drag Kit, WIDE-OUT (accessory only)
5	50649	DS Blade Wing, WIDE-OUT	24†	B60347	Hydraulic Cylinder, Slide Box (Early ram – see callout on diagram.)
ns	50650	PS Blade Wing, WIDE-OUT			
6	50651	5/8 x 2 Pin Kit		43803	Ram Assembly 1-1/2 x 13-15/16 DA (Current ram – see callout on diagram.)
7	50653	5/8 x 3 Pin Kit			
8	50654	Wing Spring	ns	B60373	Combo Seal Kit, Cylinder B60347
9	66421	5/8-11 x 4 Eyebolt Kit	ns	43794	Seal Kit, Ram Assembly 43803
10	50658	DS Blade Slidebox, WIDE-OUT	25	50639	Wear Strip, Wing Top
ns	50659	PS Blade Slidebox, WIDE-OUT	26	50638	Wear Strip, Wing Bottom
11	50660	Wing Pin	27	44277-1	Shoe Kit (set of 2) (accessory only)
12	50661	Stop Bolt Kit	ns	50618	Label – WIDE-OUT Wings
13	64775	Cutting Edge Kit	ns	40986	Label – CONTRACTOR GRADE®
14	50667	WIDE-OUT Blade	28	62595	Blade Guide Assembly, Poly (set of 2)
15	29593	Label – Multiple Pinch Points	29	50675	Quadrant Assembly, WIDE-OUT
16	59900	Label – Warning/Caution, Snowplows	30	63976	Bumper Kit
17	43360	Label – Attach/Detach UltraMount® 2	31	50677	Pin Kit
18	50617	Label – Identity, WIDE-OUT	32	23039	Trip Spring
ns = not shown					

Lift Frame and A-Frame Components

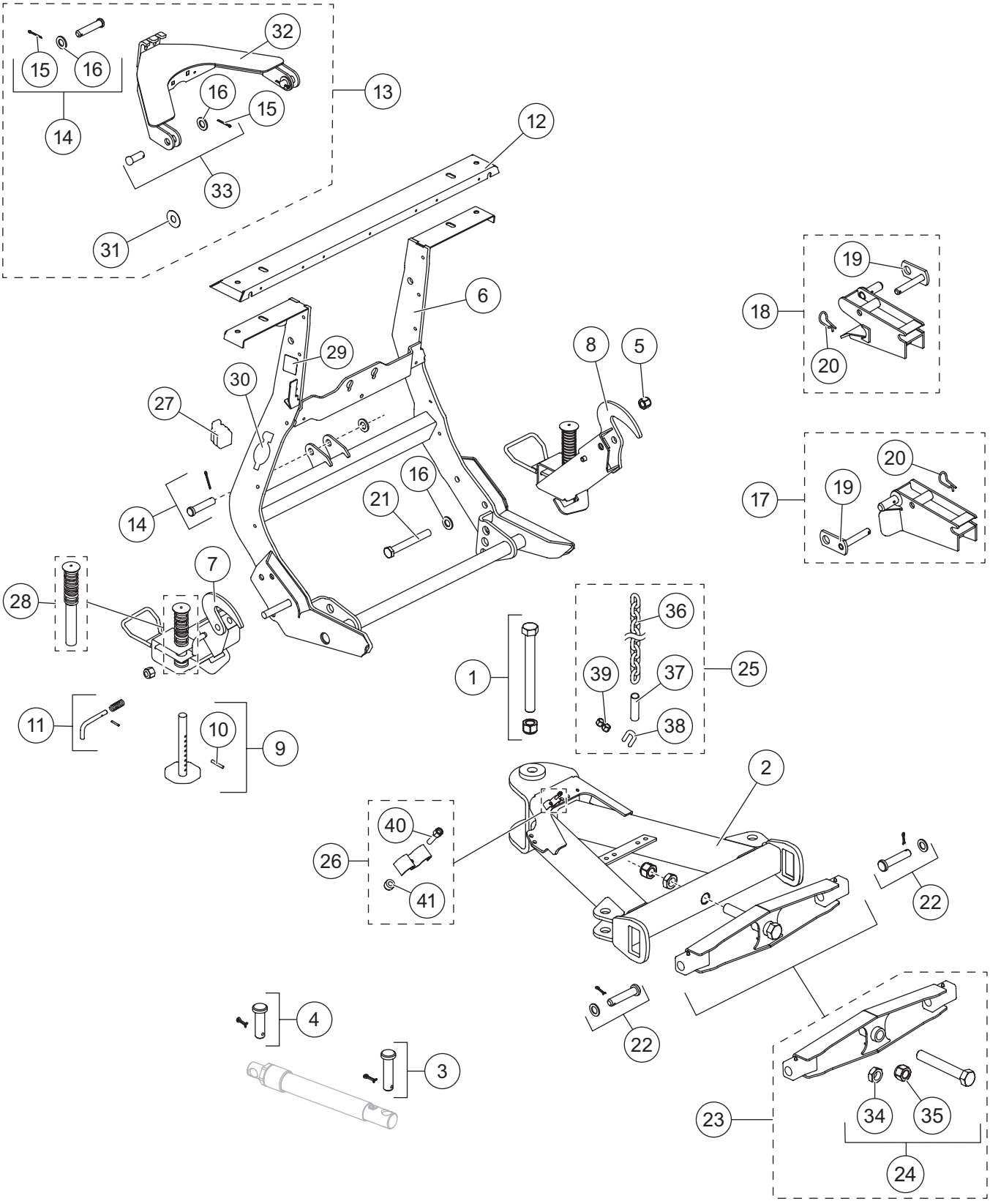

WIDE-OUT Lift Frame and A-Frame Components							
Item	**Part**	**Qty**	**Description**	**Item**	**Part**	**Qty**	**Description**
1	50668	1	Pivot Bolt Kit	15	91911K	1	5/32 x 1-1/2 Cotter Pin Kit (pkg of 4)
2	50670	1	A-Frame Kit	16	91147	6	3/4 Flat Washer
3	50672	2	Pin Kit, Base End	17	42496	1	Receiver Kit DS
4	50674	2	Pin Kit, Rod End	18	42497	1	Receiver Kit PS
5	91338	2	3/4-10 Hex Locknut GB	19	42498	2	Receiver Pin
6	43301	1	Lift Frame	20	91965K-1	2	5/32 Hairpin Cotter
7	67845	1	Stand Assembly DS	21	66451	2	3/4-10 x 6 Hex Cap Screw G5
8	67846	1	Stand Assembly PS	22	49645	2	1 x 4-3/4 Clevis Pin Kit
9	67847	2	Stand Shoe Kit	23	67842-1	1	Pivot Bar Kit
10	67635	2	1/4 x 2 Roll Pin BP	24	67855	1	Pivot Bolt Kit
11	67844	2	Stand Lock Pin Kit	25	49033	2	1/4 Grade 43 Chain Assembly
12	43302	1	Light Channel	26	49479-1	2	Hose Bracket Kit
13	43304	1	Lift Arm Kit	27	61246	1	Cable Boot
14	68740	2	3/4 x 3-1/2 Clevis Pin Kit	28	48523	1	Plunger w/ Spring
Item 6			**43301 Lift Frame**				
		1	Lift Frame	30	43358	2	Label – Identity, UltraMount® 2
29†	69689	1	Label – SECURITY GUARD™	31		2	UHMW Round Flat Washer, Special
Item 13			**43304 Lift Arm Kit**				
14	68740	1	3/4 x 3-1/2 Clevis Pin Kit	31		2	UHMW Round Flat Washer, Special
15	91911K	1	5/32 x 1-1/2 Cotter Pin Kit (pkg of 4)	32		1	Lift Arm
16	91147	3	3/4 Flat Washer	33	43351	2	3/4 x 2 Clevis Pin kit
Item 23			**67842-1 Pivot Bar Kit**				
		1	Pivot Bar	24	67855	1	Pivot Bolt Kit
Item 24			**67855 Pivot Bolt Kit**				
		1	1-8 x 7 Hex Cap Screw G5	35	91340	1	1-8 Hex Locknut GB
34	67748	1	1-8 Hex Jam Nut G5				
Item 25			**49033 1/4 Grade 43 Chain Assembly (2 per plow)**				
36		1	1/4 Grade 43 Chain	38	90453	1	3/8-16 x 1-1/2 U-Bolt G5
37	65508	1	Plastic Tube	39	91333	2	3/8 x 16 Hex Locknut GB
Item 26			**49479-1 Hose Bracket Kit (2 per plow)**				
		1	Hose Bracket	41	91331	1	1/4-20 Hex Locknut GB
40		1	1/4-20 x 1-1/4 Socket Cap Screw G5				
			ns = not shown				G = Grade

† Not used for Central Hydraulics.

Hydraulic Unit Components

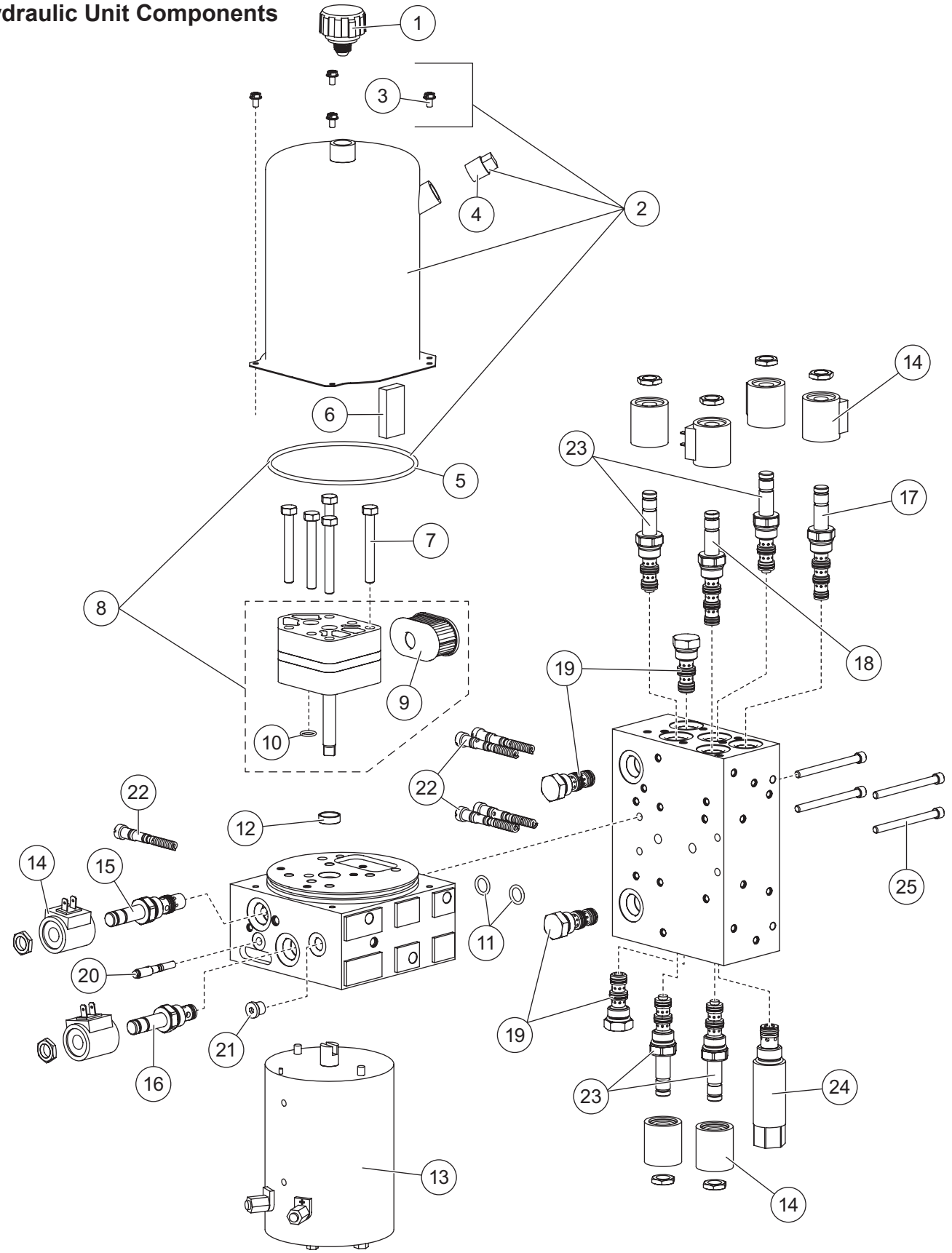

49450 Hydraulic Unit WIDE-OUT
48256 Hydraulic Unit Service Kit WIDE-OUT*
(Not used for Central Hydraulics)

Item	Part	Qty	Description	Item	Part	Qty	Description
1	21727-2K	1	Breather Pressure Control	17	49452	1	Valve – SV08-45 w/Nut
2	44327-1	1	Reservoir Kit	18	49456	1	Valve – SV08-41 w/Nut
3	66607	4	10-24 x 5/16 Machine Screw	19	49458	4	Valve – PC08-30 w/Nut
4	92079	1	Plug, Square 3/8 NPTF	20	56662	1	Quill Assembly 5/16-24 Thread
5	66519	1	O-Ring 2-250		48517	1	Quill Assembly 1/2-20 Thread
6	73897	1	Magnet	21	44344	1	Plug, Hex Socket –4 M ORB
7	90080	5	5/16-18 x 2-1/2 Hex Cap Screw G5	22	49138K-3	2-1/2	Relief Valve Kit (2 sets)
8	44328-1	1	Pump Kit	23	49228K-1	4	Cartridge 30 w/Jam Nut
9	56789-3	1	Suction Filter	24	49462	1	Crossover Relief Valve – 4000 psi
10	56274	1	O-Ring –013	25	29081	4	1/4-20 x 3 Socket Cap Screw
11	55587	2	O-Ring –112	ns	29099	2	1/4-20 x 1/4 Hex Washer-Head Thread-Rolling Screw
12	66515	1	Pump Shaft Seal				
13	21500-1	1	Motor Assembly 4-1/2"	ns	44326	1	1/4-20 x 1/2 6-Lobe Round Washer-Head Screw (pkg of 5)
14	49230K-2	8	Coil With Spade Terminals				
15	44332	1	Valve – SVCV08-20 w/Nut	ns	44355	2	1/4-20 x 5/8 Hex Washer-Head Thread-Rolling Screw
16	49227K-2	1	Valve – SV08-2004 w/Nut				
O-Ring Service Kits							
–	56657-3	–	Back-Up/O-Ring Kit (Does not contain O-Rings for cartridge valves.)	–	49259-2	–	Seal Kit – Valves SV08-30, 31, 33, 40, 41, 43, 45, SVCV08-20 & PC08-30
–	49258-2	–	Seal Kit – Valves SV08-2004, CV08-20, SF08-2015		49464		Seal Kit – Crossover Relief Valve
ns = not shown				G = Grade			

* Includes 49450 Hydraulic Unit, 49455 Cover Assembly (p. 10) and Plow-Side Electrical Components (p. 12).

Hydraulic Unit Cover Assembly

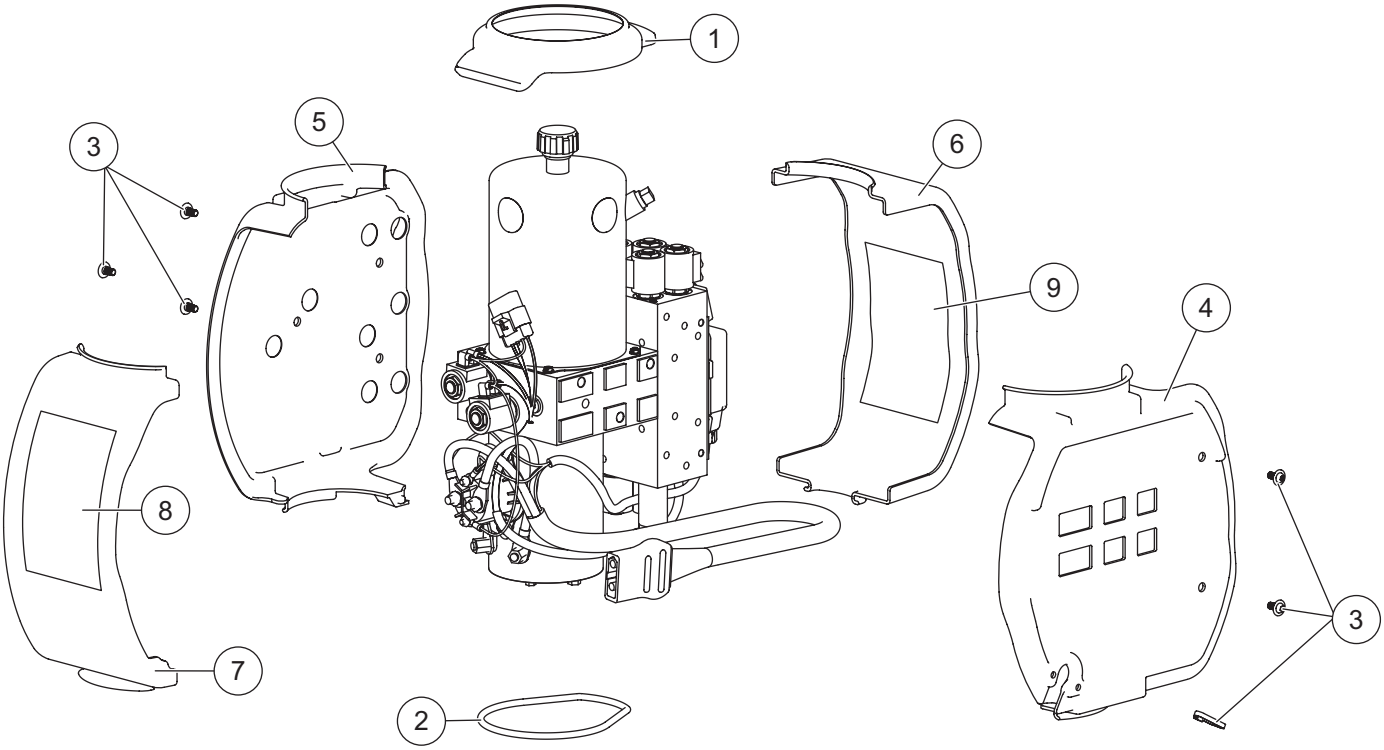

49455 Cover Assembly							
Item	**Part**	**Qty**	**Description**	**Item**	**Part**	**Qty**	**Description**
1	44352	1	Top Retainer Ring	7	44304	1	Cover, Side 4
2	44366	1	Bottom Retainer Ring	8	44904	1	Label – Information (S1–S2)
3	44326	1	1/4-20 x 1/2 6-Lobe Round Washer-Head Screw (5-pack) w/8" Cable Tie	9	44906	1	Label – Information (S5–S10)
				ns	49445	1	Label – Identity, WIDE-OUT Hydraulic Unit
4		1	Cover, Side 1				
5		1	Cover, Side 2	ns	61536	1	Cable Tie 14"
6	44303	1	Cover, Side 3				
ns = not shown							

Lift and Angle Ram Components

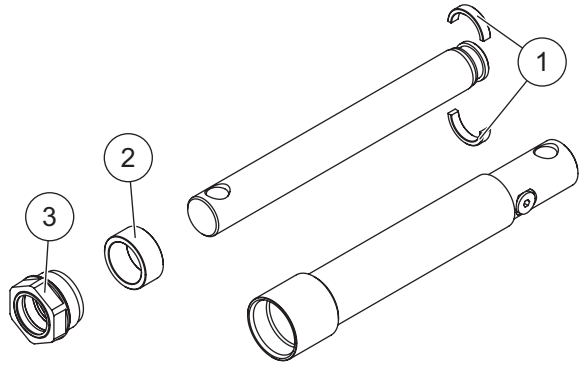

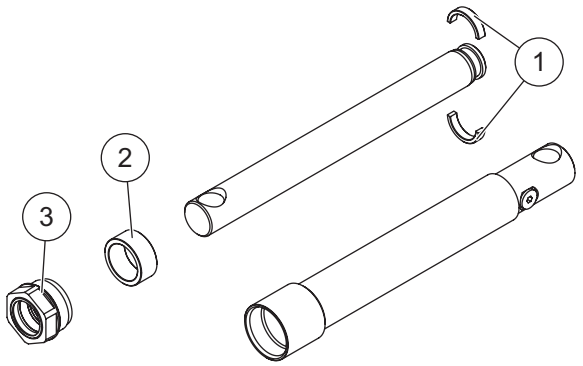

56538K Lift Ram Assembly 1-1/2 x 8			
Item	**Part**	**Qty**	**Description**
1	62290	2	Split Bearing 1-1/2"
2	56537	1	Spacer
3	48985	1	Gland Nut Assembly

49460 Angle Ram Assembly 1-1/2 x 10			
Item	**Part**	**Qty**	**Description**
1	62290	2	Split Bearing 1-1/2"
2	56537	1	Spacer
3	48985	1	Gland Nut Assembly

Hoses and Fittings

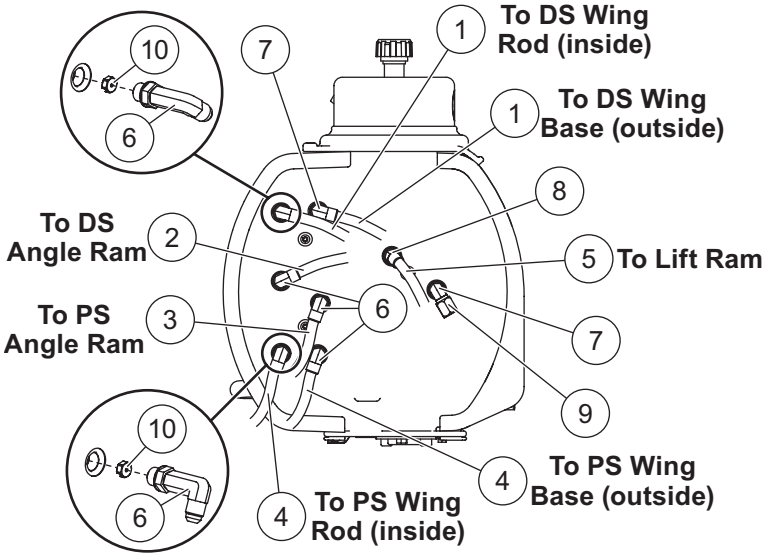

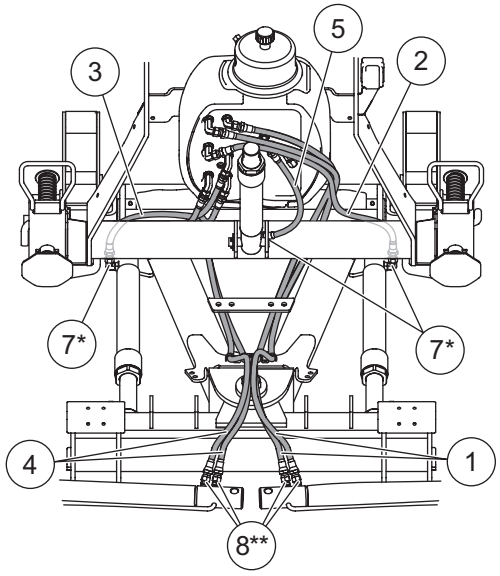

Hoses and Fittings							
Item	**Part**	**Qty**	**Description**	**Item**	**Part**	**Qty**	**Description**
1	49468	2	Hose, 3/8 x 78 w/F JIC Ends	7*	56615-1	5	Elbow 90° –6 M JIC/–6 M ORB
2	44351	1	Hose, 3/8 x 38 w/F JIC Ends	8**	26694	5	Elbow 45° –6 M JIC/–6 M ORB
3	49469	1	Hose, 3/8 x 32 w/F JIC Ends	9	44346	1	Drain Cap –6 F JIC
4	49467	2	Hose, 3/8 x 67 w/F JIC Ends	10	49465	2	Orifice Kit
5	56617	1	Hose, 1/4 x 16 w/F JIC Ends	ns	56823	5	Hose Wrap, Polyethylene
6	64212-1	5	Elbow, Extra Long 90° –6 JIC/ –6 M ORB	ns	98043	3	3/8-16 x 1 Button Cap Screw
F = Female				ns = not shown			M = Male or Metric

* Also used for Central Hydraulics, qty 3. ** Also used for Central Hydraulics, qty 4.

Electrical Components

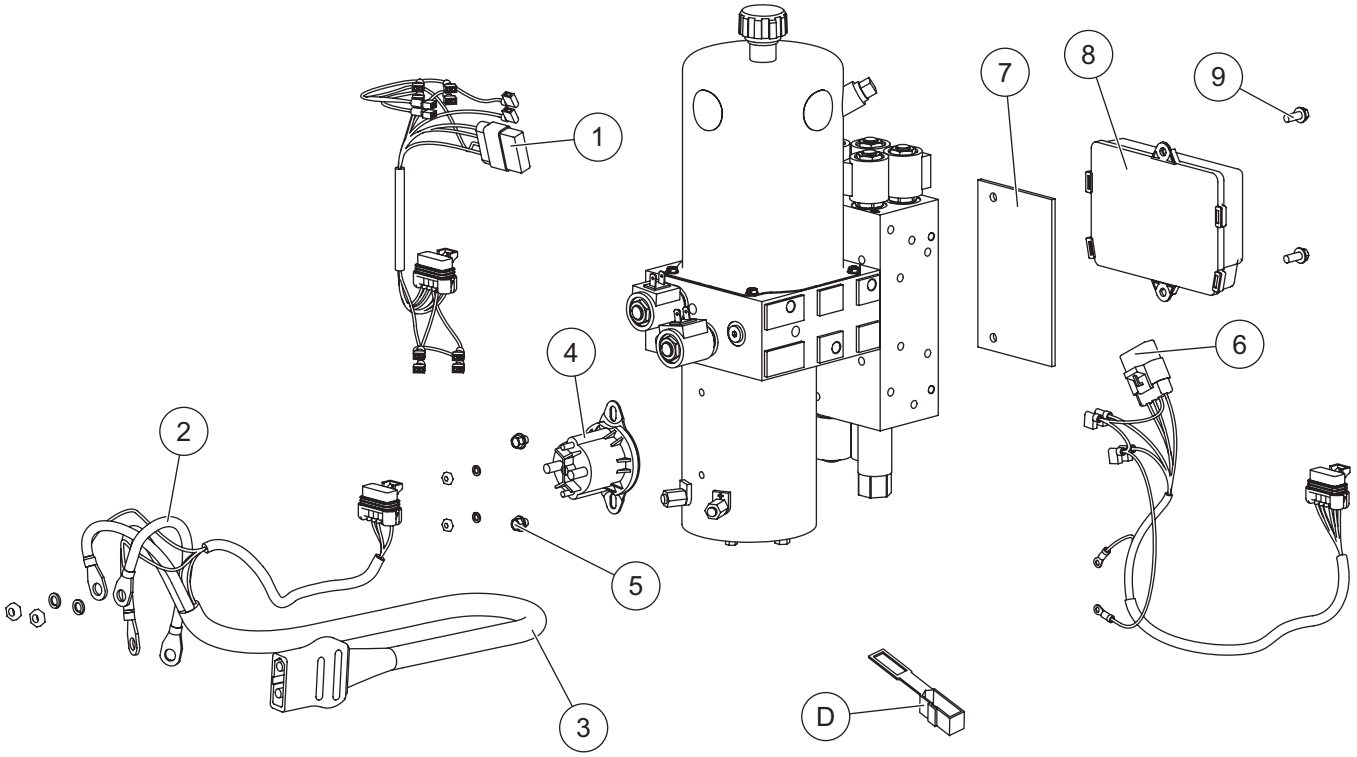

Plow-Side Electrical Components							
Item	**Part**	**Qty**	**Description**	**Item**	**Part**	**Qty**	**Description**
1	29471	1	Harness Plow Control 6 Solenoid	7	44308	11	Spacer Module
2	29071	1	Cable Assembly 8"	8	44354-3	1	Plow Module
3	42015	1	Plow Battery Cable	9	44355	2	1/4-20 x 5/8 Hex Washer-Head Thread-Rolling Screw
4	42902	1	Motor Relay Kit				
5	29099	2	1/4-20 x 1/4 Hex Washer-Head Thread-Rolling Screw	ns	56099	1	Dielectric Grease
				ns		4	Fuse, 4-Amp Mini Automotive Blade-Style (for items 1 & 6)
6	29461	1	Harness Plow Control 2-Solenoid				
ns = not shown							

Vehicle-Side Electrical Components (Diagrams on following pages)							
A*†	28587	1	Vehicle Control Harness	D	61548K	1	Plug Cover Kit (shown with plow-side electrical components)
B*†	42014	1	Vehicle Battery Cable				
C**	26498	1	Vehicle Control Harness – Central Hydraulics				
ns = not shown							

* For diagram, see Vehicle-Side Harness Diagram.
** For diagram, see Vehicle-Side Harness Diagram – Central Hydraulics.
† Not used for Central Hydraulics.

Vehicle-Side Harness Diagram
3-Port, 2-Plug System

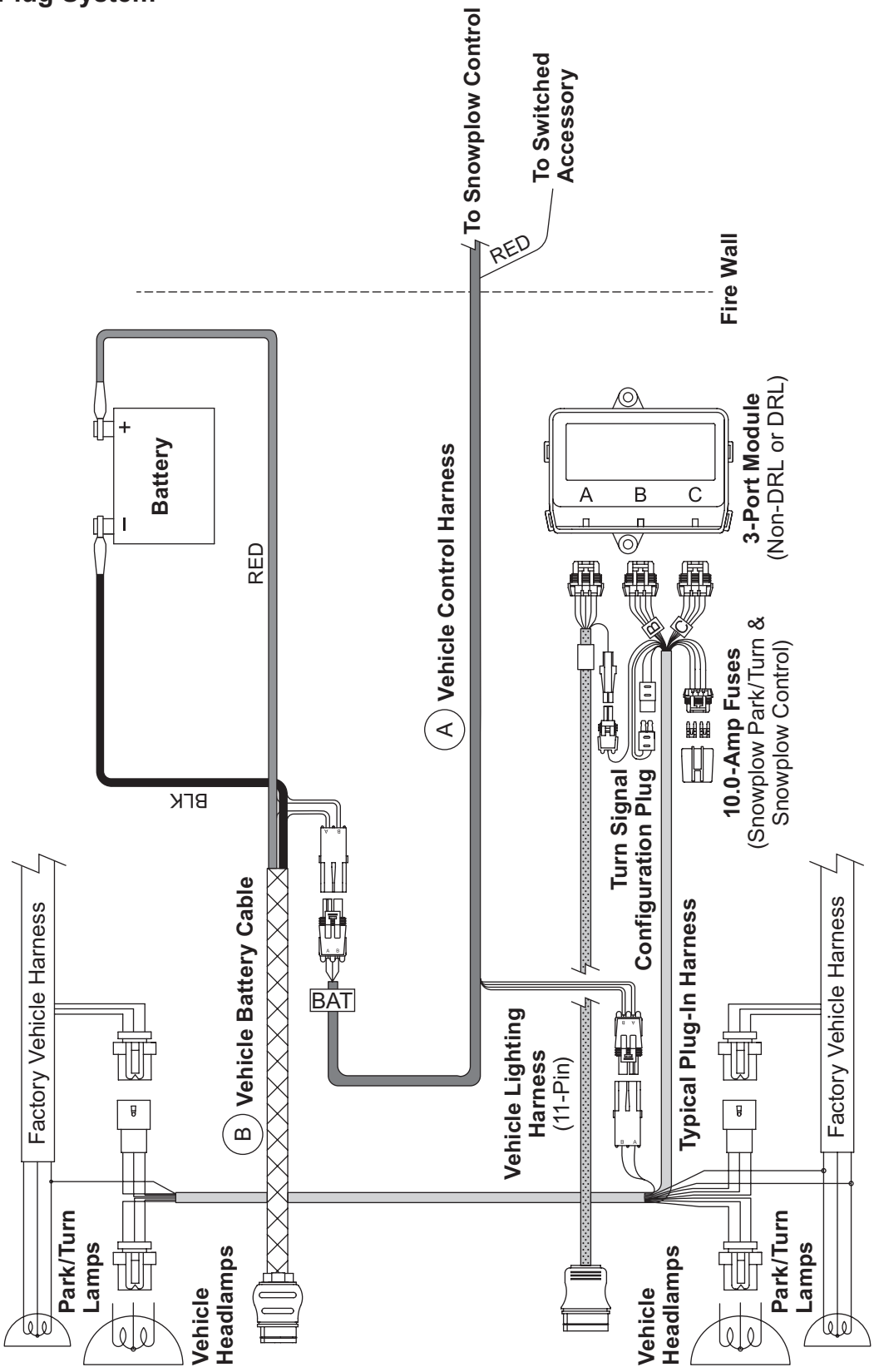

Vehicle-Side Harness Diagram – Central Hydraulics

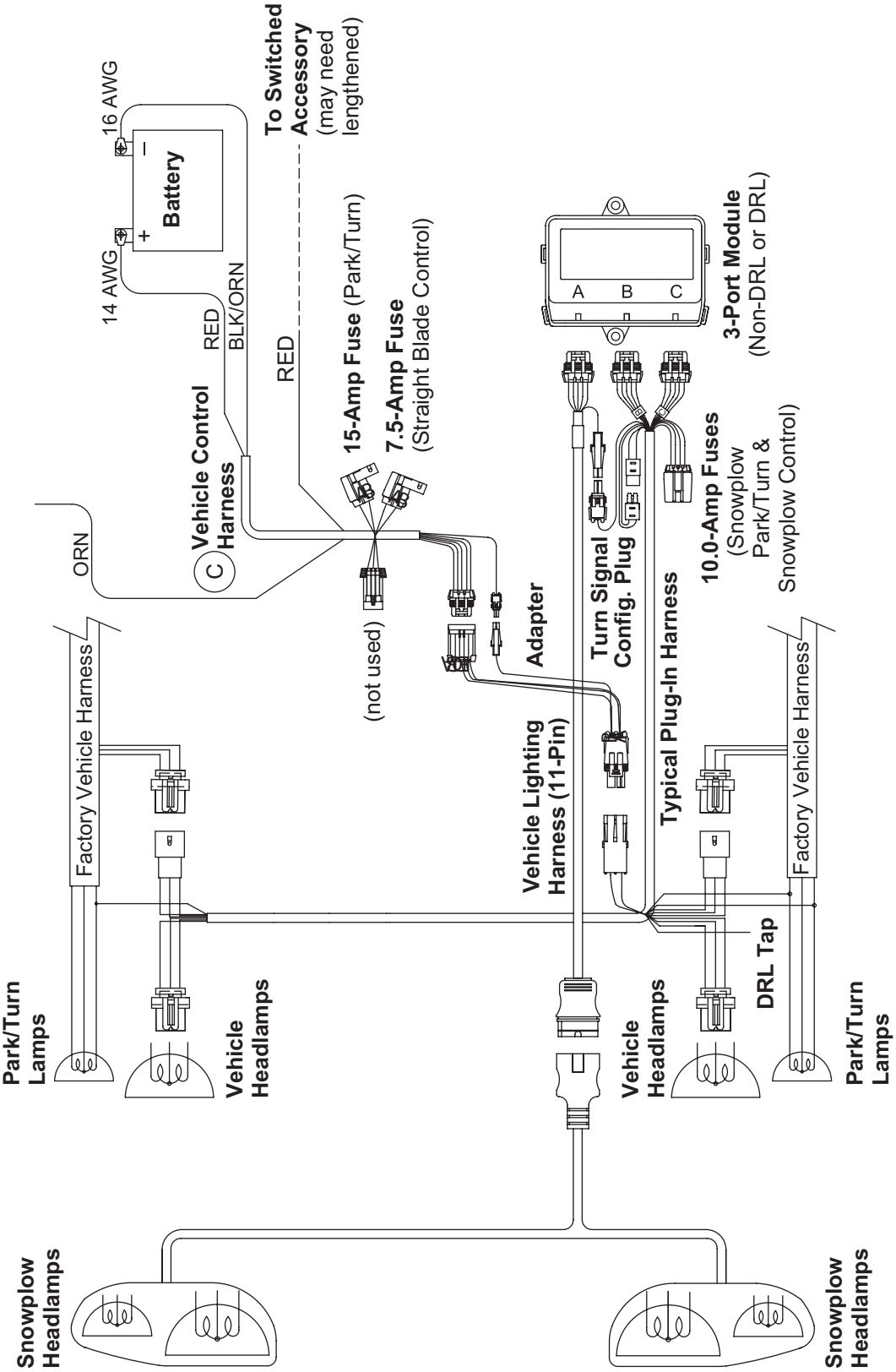

Headlamp Kit

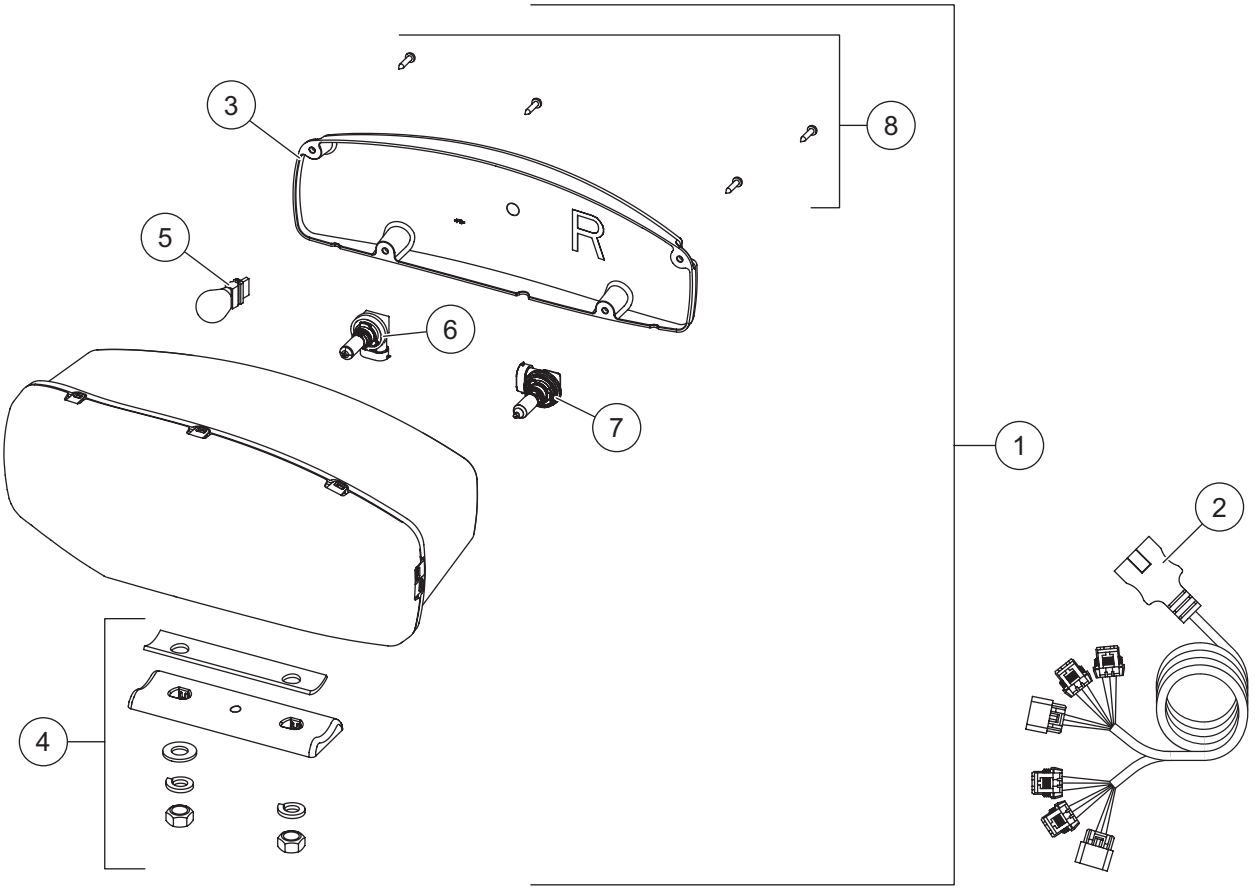

38800 Headlamp Kit H9/H11 (Pair)							
Item	**Part**	**Qty**	**Description**	**Item**	**Part**	**Qty**	**Description**
1	38802	1	Headlamp Service Kit H9/H11 PS	2	38807	1	Harness Service Kit H9/H11
ns	38801	1	Headlamp Service Kit H9/H11 DS				
Item 1	**38801/38802 Headlamp Service Kit H9/H11 PS/DS**						
3	38803	1	Rear Cover Kit H9/H11 PS	6	38811	1	H11 Headlamp Bulb Service Kit
ns	38812	1	Rear Cover Kit H9/H11 DS	7	38809	1	H9 Headlamp Bulb Service Kit
4	38804	1	Mounting Hardware Kit H9/H11	8	38808	1	Cover Screws Service Kit H9/H11 (pkg of 4)
5		1	Park/Turn Bulb (Trade No. 4157NAK)				
PS = Passenger's Side			ns = not shown				DS = Driver's Side

Western Products
PO Box 245038
Milwaukee, WI 53224-9538
www.westernplows.com

A DIVISION OF DOUGLAS DYNAMICS, LLC

Copyright © 2016 Douglas Dynamics, LLC. All rights reserved. This material may not be reproduced or copied, in whole or in part, in any printed, mechanical, electronic, film or other distribution and storage media, without the written consent of Western Products. Authorization to photocopy items for internal or personal use by Western Products outlets or snowplow owner is granted.

Western Products reserves the right under its product improvement policy to change construction or design details and furnish equipment when so altered without reference to illustrations or specifications used. Western Products or the vehicle manufacturer may require or recommend optional equipment for snow removal. Do not exceed vehicle ratings with a snowplow. Western Products offers a limited warranty for all snowplows and accessories. See separately printed page for this important information. The following are registered (®) or unregistered (™) trademarks of Douglas Dynamics, LLC: CONTRACTOR GRADE®, SECURITY GUARD™, ULTRAFINISH™, UltraMount®, UltraMount® 2, WESTERN®, WIDE-OUT™.

Printed in U.S.A.